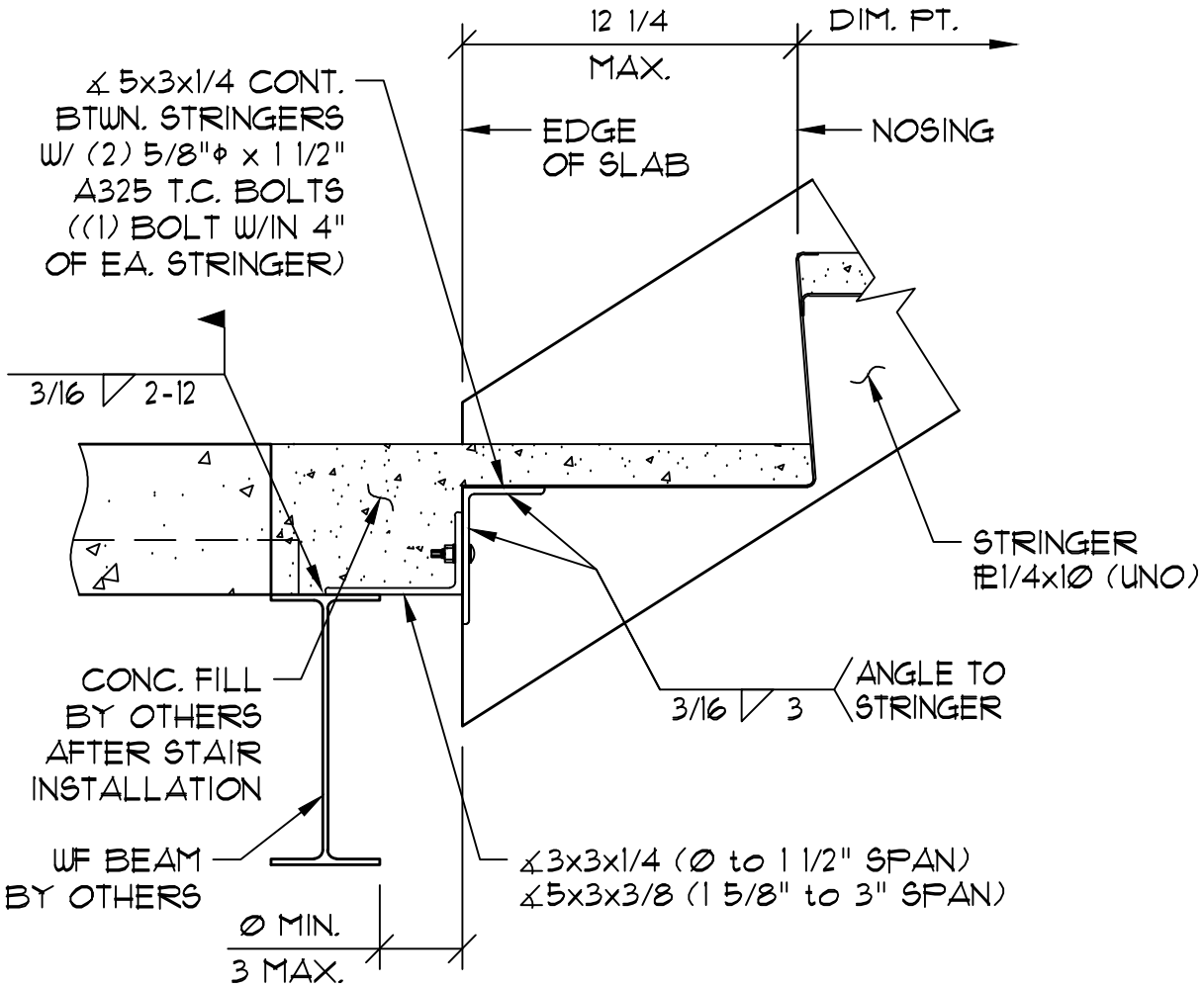

PACIFIC STAIR
CORPORATION®
8690 Stair Way NE Salem, OR 97305
www.pacificstair.com I 503.390.8305

EXTENDED BOTTOM CONNECTION TO STRUCTURAL STEEL

1. SEE S101 FOR TREAD / RISER CONSTRUCTION

CONCRETE FILL

S143