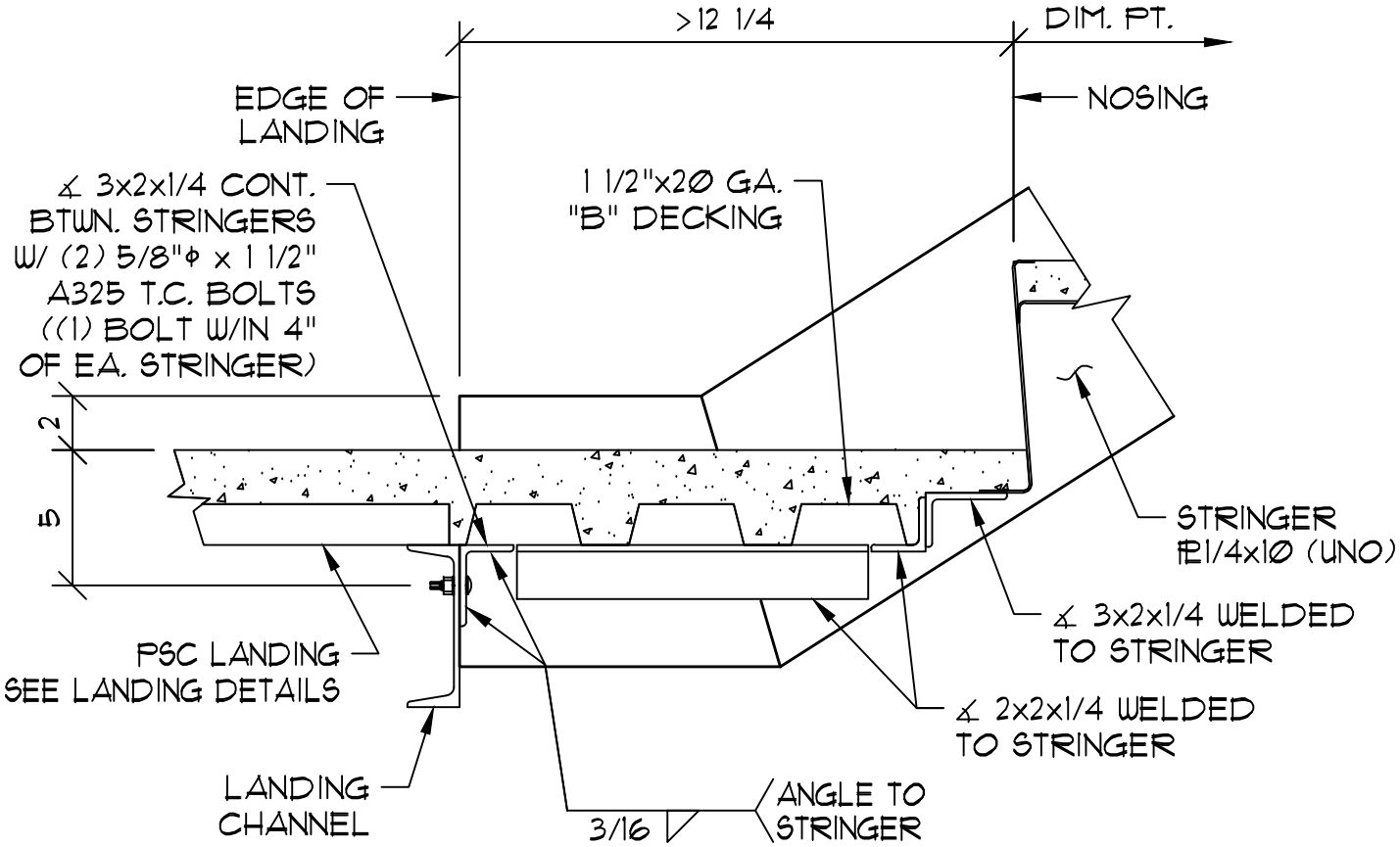

PACIFIC STAIR CORPORATION®
8690 Stair Way NE Salem, OR 97305
www.pacificstair.com | 503.390.8305

HAUNCH BOTTOM CONNECTION TO STEEL LANDING

1. SEE S101 FOR TREAD / RISER CONSTRUCTION
2. SEE L100 FOR LANDING CONSTRUCTION

CONCRETE FILL

S125